B.E.G. LUXOMAT®



PD4N-M-DACO-1C DALI-2 Set 93463-93741-92199

DALI-2 PIR motion detector with integrated DALI application controller, 360° detection, and a range of up to Ø24m (450 m²), with switching relay

Order data

Designation	Colour	Art.No
PD4N-M-DACO-1C DALI-2	white	93463
Corridor lens PD4N type A, Cover ring	anthracite	93741
Wire basket BSK (Ø 200 x 90 mm)	white	92199

Areas of application

- entrance halls
- corridors/hallways
- small offices
- open-plan offices
- conference rooms
- classrooms/seminar rooms
- sports halls/ storage rooms

Technical data

Voltage:	230 V AC ±10% 50 Hz
Dimensions:	**Ø 200 x 90 mm (92199)**
Power consumption:	approx. 2 W
Slave devices:	up to 8
Detection area:	**horizontal 360° (Ceiling mounting) (93741)**
Range:	**max. Ø 40 m across max. Ø 20 m towards (93741)**
Monitored area (tangential movement):	**250 m² / 2.5 m mounting height (93741)**
Mounting height min./max./recommended:	**2.4 m / 2.6 m / 2.5 m (93741)**
Degree / class of protection:	IP20 / Class II
Impact strength:	**IK09 (92199)**
Ambient temperature:	-25 °C to +50 °C
Housing:	**polycarbonate, UV-resistant + coated steel basket (92199)**
Material color:	**anthracite mat, similar to RAL7016 (93741)**
Channel 1 (lighting control)	
DALI output:	80 mA (guaranteed), 125 mA (max.), shut down mechanism
Supported control gear:	DT0, DT5, DT6, DT7
Supported control devices:	- (single master)
Follow-up time:	1 min – 150 min
Orientation light:	10 – 30 % / OFF / 5 min – 60 min / ∞
Brightness set value:	10 – 2500 Lux
Channel 2 (HVAC or lighting control)	
Switching power:	2300 W, cos φ = 1 1150 VA, cos φ = 0.5 800 W LED max. inrush current Ip (20 ms) = 165 A
Type of contact:	1x µ-contact, dry, bistable

Product information

Set : PD4N-M-DACO-1C DALI-2 + Corridor lens PD4N type A, Cover ring anthracite mat, similar to RAL7016 + Wire basket BSK (Ø 200 x 90 mm) white

Occupancy detector with integrated DALI application controller for energy-efficient lighting control

DALI-2 certified product

Integrated DALI power supply

DALI interface for controlling digital, dimmable ECGs in broadcast mode

Manual switching or dimming via conventional pushbuttons

Bidirectional IR communication enables fast integration into the project management function of the B.E.G. One app

Complete range of functions can only be activated using the BLE-IR-Adapter and a compatible Smartphone or Tablet (Android, iOS).

Semi-automatic, full automatic, presence-independent or light-independent mode adjustable

Powerful switching relay for different operating modes, e.g. Cut-off function for DALI ballasts, HVAC, blackboard illumination.

Adjustable regulation dynamics (minimum and maximum values)

Adjustable speed and delay of the regulation

Single master version, not networkable

Detection area can be extended by using slave devices

Mixed light measurement with internal and external light sensor

DALI output power can be increased with accessories

Integrated daylight harvesting circuit (or switch output)

Adjustable switch-on value

Last value - Reminder function for switch-on value

Adjustable brightness set value and reflection factor

Indication of the current light sensor value in the B.E.G. One App

Self-check and display of device errors in the B.E.G. One App

Status LEDs can be activated / deactivated

PIN code

Corridor function - Deactivates the possibility to switch off the light via the push-button

Follow-up time:	5 min – 120 min, Alarm pulse, Pulse
Light measuring:	Mixed light measuring

Number of DALI participants can be determined quickly and reliably via the B.E.G. Online DALI Line Planner

Avoidance of standby losses of the lighting system in accordance with EnEV DIN V 18599-4

Software is backwards compatible with the first generation (except DSI, double lock and corridor function)

Factory setting 10 min follow-up time and 500 lux brightness set value

Including pre-assembled spring clamp with strain relief and contact protection cap for recessed ceiling mounting

Accessory for surface mounting available

Accessories for wall mounting optionally available

Further accessories for colour matching optionally available

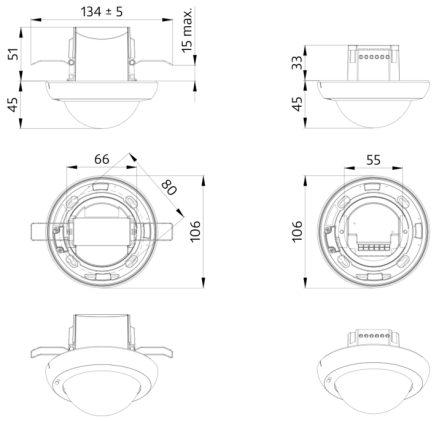
134 ± 5
15 max.
51
45
33
45
66
80
106
55
106

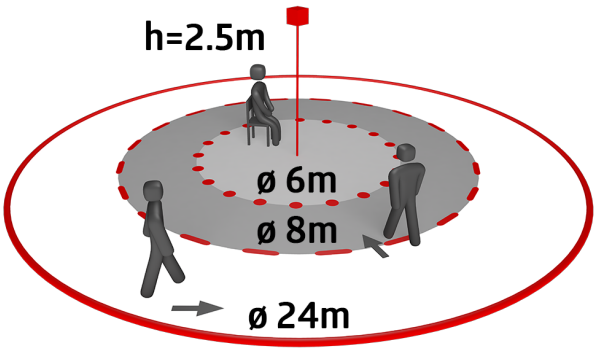
h=2.5m
ø 6m
ø 8m
ø 24m

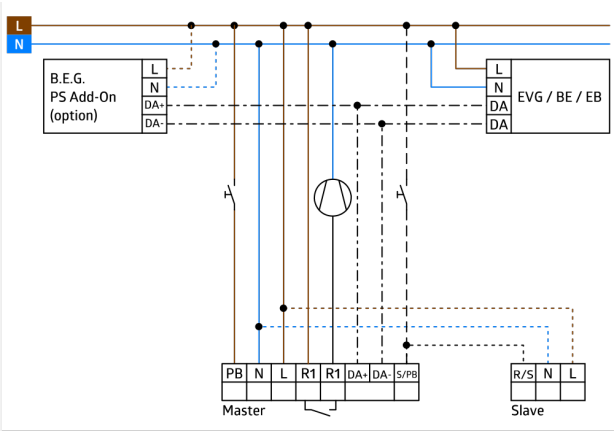
L
N
B.E.G.
PS Add-On
(option)
L
N
DA+
DA-
L
N
DA
DA
EVG / BE / EB
PB
N
L
R1
R1
DA+
DA-
S/PB
Master
R/S
N
L
Slave

Set items

To receive the bundle according to the technical specification, please order the items listed.



PD4N-M-DACO-1C DALI-2
Art.No: 93463

Voltage: 230 V AC ±10% 50 Hz
Dimensions: Ø 106 x 95 mm
Power consumption: approx. 2 W



Corridor lens PD4N type A, Cover ring
Art.No: 93741

Detection area: horizontal 360° (Ceiling mounting)
Range: max. Ø 40 m across
max. Ø 20 m towards
Monitored area (tangential movement): 250 m² / 2.5 m mounting height

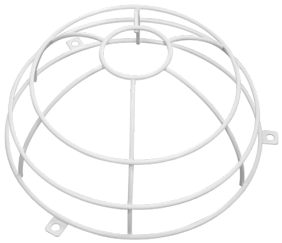

Wire basket BSK (Ø 200 x 90 mm)
Art.No: 92199

Dimensions: Ø 200 x 90 mm
Impact strength: IK09
Housing: coated steel basket