B.E.G. LUXOMAT®




# PD4N-M-DACO DALI-2 Set 93460-93314

DALI-2 PIR motion detector with integrated DALI application controller, 360° detection, and a range of up to Ø24m (450 m²)

## Order data

| Designation | Colour | Art.No |
|---|---|---|
| PD4N-M-DACO DALI-2 | white | 93460 |
| SM socle mounting set IP65 PD4N | white | 93314 |

## Areas of application

- entrance halls
- corridors/hallways
- small offices
- open-plan offices
- conference rooms
- classrooms/seminar rooms
- sports halls/ storage rooms

## Technical data

| | |
|---|---|
| Voltage: | 230 V AC ±10% 50 Hz |
| Dimensions: | **Ø 106 x 95 mm + 133 x 133 x 69 mm (93314)** |
| Power consumption: | approx. 2 W |
| Slave devices: | up to 8 |
| Detection area: | horizontal 360° (Ceiling mounting) |
| Range: | max. Ø 24 m across<br>max. Ø 8 m towards<br>max. Ø 6.4 m seated |
| Monitored area (tangential movement): | 450 m² / 2.5 m mounting height |
| Mounting height min./max./recommended: | 2 m / 10 m / 2.5 m |
| Degree / class of protection: | **IP20 / Class II + IP65 (93314)** |
| Impact strength: | IK04 |
| Ambient temperature: | -25 °C to +50 °C |
| Housing: | polycarbonate, UV-resistant |
| Material color: | **white (93314)** |
| **Channel 1 (lighting control)** | |
| DALI output: | 80 mA (guaranteed), 125 mA (max.), shut down mechanism |
| Supported control gear: | DT0, DT5, DT6, DT7 |
| Supported control devices: | - (single master) |
| Follow-up time: | 1 min – 150 min |
| Orientation light: | 10 – 30 % / OFF / 5 min – 60 min / ∞ |
| Brightness set value: | 10 – 2500 Lux |
| Light measuring: | Mixed light measuring |

## Product information

Set : PD4N-M-DACO DALI-2 + SM socle mounting set IP65 PD4N white

Occupancy detector with integrated DALI application controller for energy-efficient lighting control

DALI-2 certified product

Integrated DALI power supply

DALI interface for controlling digital, dimmable ECGs in broadcast mode

Manual switching or dimming via conventional pushbuttons

Bidirectional IR communication enables fast integration into the project management function of the B.E.G. One app

Complete range of functions can only be activated using the BLE-IR-Adapter and a compatible Smartphone or Tablet (Android, iOS).

Semi-automatic, full automatic, presence-independent or light-independent mode adjustable

Adjustable regulation dynamics (minimum and maximum values)

Adjustable speed and delay of the regulation

Single master version, not networkable

Detection area can be extended by using slave devices

Mixed light measurement with internal and external light sensor

DALI output power can be increased with accessories

Integrated daylight harvesting circuit (or switch output)

Adjustable switch-on value

Last value - Reminder function for switch-on value

Adjustable brightness set value and reflection factor

Indication of the current light sensor value in the B.E.G. One App

Self-check and display of device errors in the B.E.G. One App

Status LEDs can be activated / deactivated

PIN code

Corridor function - Deactivates the possibility to switch off the light via the push-button

Number of DALI participants can be determined quickly and reliably via the B.E.G. Online DALI Line Planner

Software is backwards compatible with the first generation (except DSI, double lock and corridor function)

Factory setting 10 min follow-up time and 500 lux brightness set value

Including pre-assembled spring clamp with strain relief and contact protection cap for recessed ceiling mounting

Accessory for surface mounting available

Accessories for wall mounting optionally available

Further accessories for colour matching optionally available

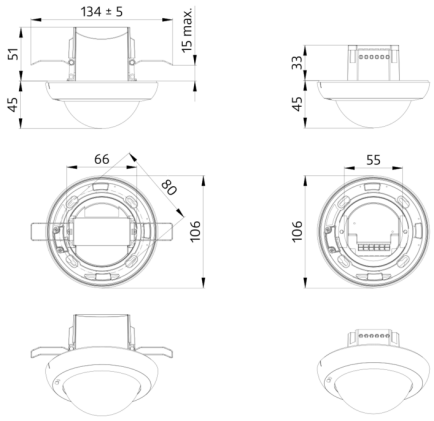
134 ± 5
15 max.
51
45
33
45
66
80
106
55
106

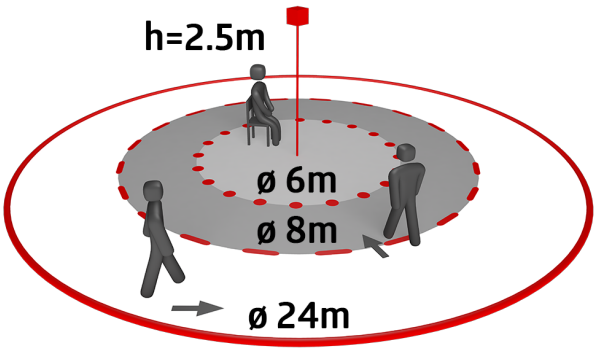
h=2.5m
ø 6m
ø 8m
ø 24m

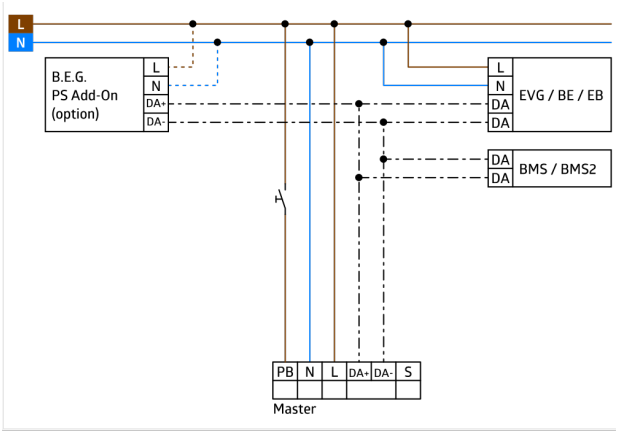
L
N
B.E.G.
PS Add-On
(option)
L
N
DA+
DA-
L
N
DA
DA
EVG / BE / EB
DA
DA
BMS / BMS2
PB
N
L
DA+
DA-
S
Master

## Set items

To receive the bundle according to the technical specification, please order the items listed.



**PD4N-M-DACO DALI-2**
Art.No: 93460

Voltage: 230 V AC ±10% 50 Hz
Dimensions: Ø 106 x 95 mm
Power consumption: approx. 2 W



**SM socle mounting set IP65 PD4N**
Art.No: 93314

Dimensions: 133 x 133 x 69 mm
Degree / class of protection: IP65
Material color: white