PD9-1C-12-48V-FC Set 92985-92238



12–48 V PIR motion detector with 360° detection and a range of up to Ø10m (78 m²), with a dry contact

Order data

Designation	Colour	Art.No
PD9-1C-12-48V-FC	white	92985
Cover ring PD9 Ø 36 mm	white	92238

Areas of application

- entrance halls
- corridors/hallways
- small offices

Technical data

Voltage:	12 – 48 V AC / DC
Dimensions:	Sensor head: Ø 45 x 37 mm, Power supply: 165 x 24 x 24 mm
Power consumption:	< 0.25 W
Detection area:	horizontal 360° (Ceiling mounting)
Range:	max. Ø 10 m across max. Ø 6 m towards max. Ø 4 m seated
Monitored area (tangential movement):	78 m² / 2.5 m mounting height
Mounting height min./max./recommended:	2 m / 5 m / 2.5 m
Degree / class of protection:	IP20 / Class II
Impact strength:	IK03
Ambient temperature:	-25 °C to +50 °C
Housing:	polycarbonate, UV-resistant
Material color:	**white glossy (92238)**
Cable length:	45 cm
Channel 1 (lighting control, potential-free (dry))	
Switching power:	1000 W, cos φ = 1 800 W LED max. inrush current Ip (20 ms) = 165 A max. inrush current Ip (200 µs) = 800 A
Type of contact (k):	1x µ-contact, dry NO contact with tungsten pre-make contact
Follow-up time:	30 sec – 30 min, Pulse
Switch-on threshold:	10 – 2000 Lux

Product information

Set : PD9-1C-12-48V-FC + Cover ring PD9 Ø 36 mm white glossy

Mini-motion detector with operating voltage 12-48 V

One channel for light switching

Easy installation on device

Power supply passes through the hole in the ceiling for the detector (34 mm Ø)

Spring clips for quick and easy installation in suspended ceilings and light fittings

Includes 45 mm cover ring and blinds

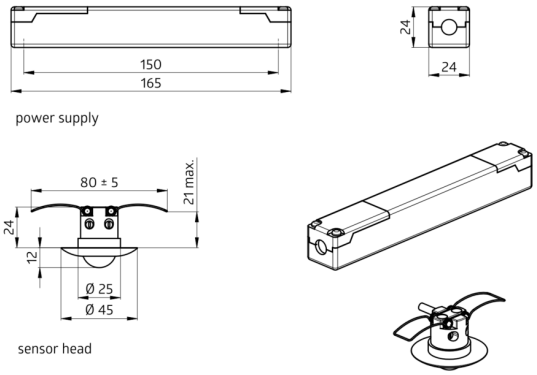
150
165
24
24
power supply
80 ± 5
21 max.
24
12
Ø 25
Ø 45
sensor head

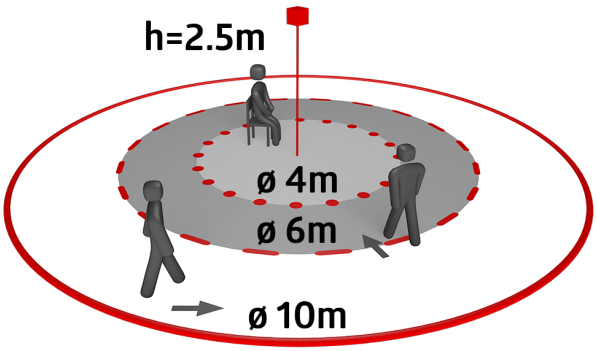
h=2.5m
ø 4m
ø 6m
ø 10m

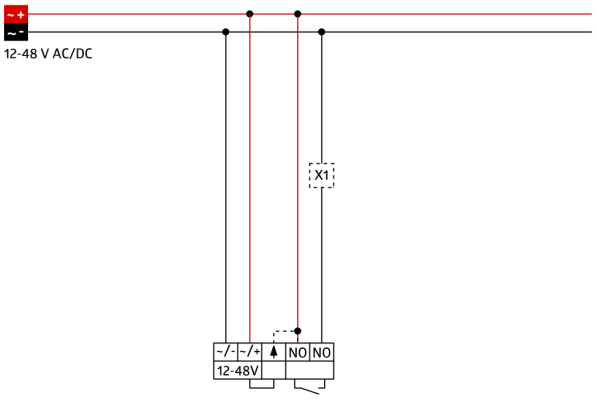
12-48 V AC/DC
X1
-/~
-/~
+
NO
NO
12-48V

Set items

To receive the bundle according to the technical specification, please order the items listed.



PD9-1C-12-48V-FC
Art.No: 92985

Voltage: 12 – 48 V AC / DC
Dimensions: Sensor head: Ø 45 x 37 mm, Power supply: 165 x 24 x 24 mm
Power consumption: < 0.25 W

Cover ring PD9 Ø 36 mm
Art.No: 92238

Dimensions: Ø 36 mm
Housing: polycarbonate, UV-resistant
Material color: white glossy