PD9-1C-FC Set
92902-92958-92235



230V PIR motion detector with 360° detection and a range of up to Ø10m (78 m²)

Order data

Designation	Colour	Art.No
PD9-1C-FC	white	92902
Cover IP65 for Sensor head PD9	transparent	92958
Cover ring PD9 Ø 36 mm	anthracite	92235

Areas of application

- toilets
- equipment rooms
- entrance halls
- corridors/hallways
- small offices

Technical data

Voltage:	110 – 240 V AC 50 / 60 Hz
Dimensions:	Sensor head: Ø 45 x 37 mm, Power supply: 165 x 24 x 24 mm
Power consumption:	approx. 0.5 W
Detection area:	horizontal 360° (Ceiling mounting)
Range:	max. Ø 10 m across max. Ø 6 m towards max. Ø 4 m seated
Monitored area (tangential movement):	78 m² / 2.5 m mounting height
Mounting height min./max./recommended:	2 m / 5 m / 2.5 m
Degree / class of protection:	**IP20 / Class II + IP65 (92958)**
Impact strength:	IK03
Ambient temperature:	-25 °C to +50 °C
Housing:	polycarbonate, UV-resistant
Material color:	**anthracite glossy (92235)**
Cable length:	45 cm
Channel 1 (lighting control)	
Switching power:	1000 W, cos φ = 1 500 VA, cos φ = 0.5 400 W LED
Type of contact (k):	1x µ-contact, NO contact
Follow-up time:	30 sec – 30 min, Pulse
Switch-on threshold:	10 – 2000 Lux

Product information

Set : PD9-1C-FC + Cover IP65 for Sensor head PD9 transparent + Cover ring PD9 Ø 36 mm anthracite glossy

Mini-motion detector for indoor use

One channel for light switching

Zero crossing switching

Easy installation on device

Power supply passes through the hole in the ceiling for the detector (34 mm Ø)

Spring clips for quick and easy installation in suspended ceilings and light fittings

Includes 45 mm cover ring and blinds

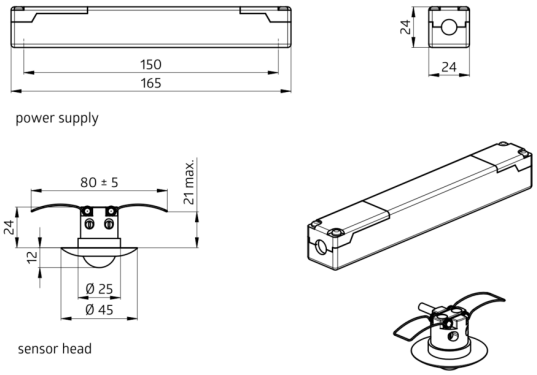
150
165
24
24
power supply
80 ± 5
21 max.
24
12
Ø 25
Ø 45
sensor head

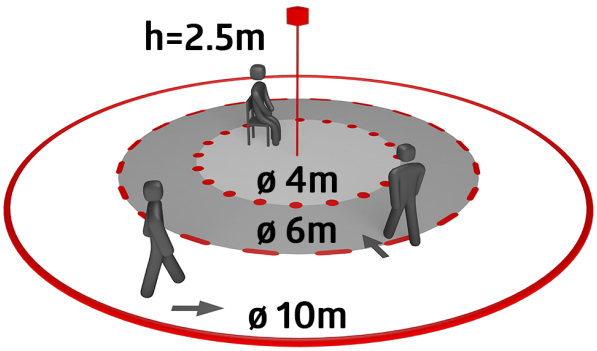
h=2.5m
ø 4m
ø 6m
ø 10m

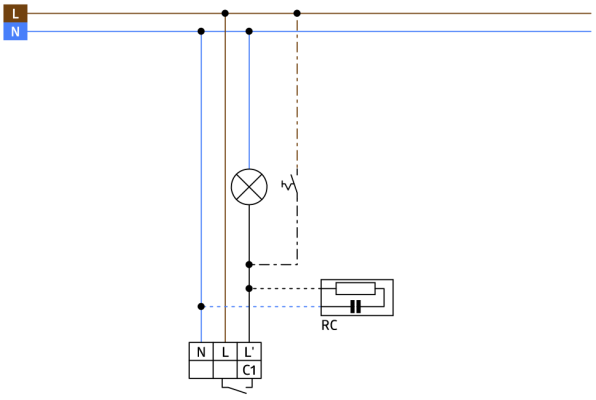
L
N
RC
N
L
L'
C1

Set items

To receive the bundle according to the technical specification, please order the items listed.



PD9-1C-FC
Art.No: 92902

Voltage: 110 – 240 V AC 50 / 60 Hz
Dimensions: Sensor head: Ø 45 x 37 mm,
Power supply: 165 x 24 x 24 mm
Power consumption: approx. 0.5 W



Cover IP65 for Sensor head PD9
Art.No: 92958

Degree / class of protection: IP65
Housing: UV-resistant
Material color: transparent



Cover ring PD9 Ø 36 mm
Art.No: 92235

Dimensions: Ø 36 mm
Housing: polycarbonate, UV-resistant
Material color: anthracite glossy