B.E.G. LUXOMAT®




# PD9-M-1C-FC Set
# 92900-92958-92238

230V PIR motion detector with 360° detection and a range of up to Ø10m (78 m²), remote-controlled

## Order data

| Designation | Colour | Art.No |
|---|---|---|
| PD9-M-1C-FC | white | 92900 |
| Cover IP65 for Sensor head PD9 | transparent | 92958 |
| Cover ring PD9 Ø 36 mm | white | 92238 |

## Areas of application

- entrance halls
- small offices
- corridors/hallways

## Technical data

| | |
|---|---|
| Voltage: | 110 – 240 V AC 50 / 60 Hz |
| Dimensions: | Sensor head: Ø 45 x 28 mm, Power supply: 165 x 24 x 24 mm |
| Power consumption: | approx. 0.5 W |
| Detection area: | horizontal 360° (Ceiling mounting) |
| Range: | max. Ø 10 m across<br>max. Ø 6 m towards<br>max. Ø 4 m seated |
| Monitored area (tangential movement): | 78 m² / 2.5 m mounting height |
| Mounting height min./max./recommended: | 2 m / 5 m / 2.5 m |
| Degree / class of protection: | **IP20 / Class II + IP65 (92958)** |
| Impact strength: | IK03 |
| Ambient temperature: | -25 °C to +50 °C |
| Housing: | polycarbonate, UV-resistant |
| Material color: | **white glossy (92238)** |
| Cable length: | 45 cm, screened |
| **Channel 1 (lighting control)** | |
| Switching power: | 2300 W, cos φ = 1<br>1150 VA, cos φ = 0.5<br>800 W LED<br>max. inrush current Ip (20 ms) = 165 A<br>max. inrush current Ip (200 µs) = 800 A |
| Type of contact (k): | 1x µ-contact, NO contact with tungsten pre-make contact |
| Follow-up time: | 5 min – 30 min, Pulse |
| Switch-on threshold: | 20 – 1000 Lux |
| Light measuring: | Mixed light measuring |

## Product information

Set : PD9-M-1C-FC + Cover IP65 for Sensor head PD9 transparent + Cover ring PD9 Ø 36 mm white glossy

Mini-occupancy detector

One channel for light switching

Version as master device

Detection area can be extended by using slave devices

**Easy operation with remote control (required)**

Manual switching via push-button possible

Power supply passes through the hole in the ceiling for the detector (34 mm Ø)

Spring clips for quick and easy installation in suspended ceilings and light fittings

Includes 45 mm cover ring and blinds

Factory settings 10 min and 500 lux

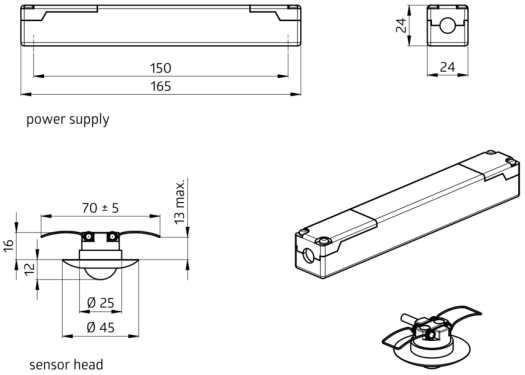
150
165
24
24
power supply
70 ± 5
13 max.
16
12
Ø 25
Ø 45
sensor head

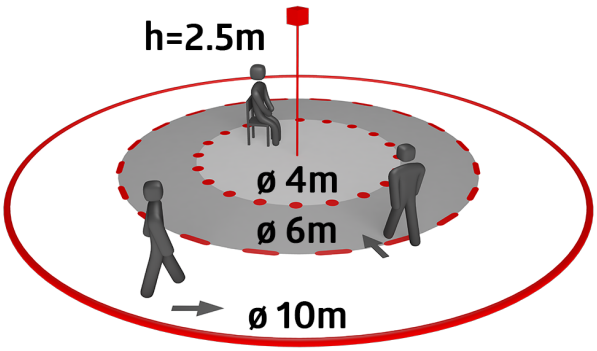
h=2.5m
ø 4m
ø 6m
ø 10m

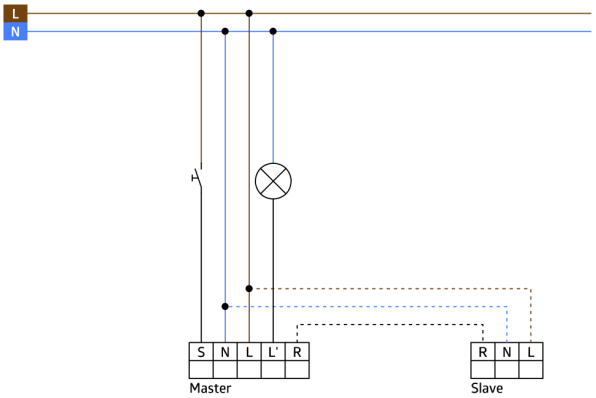
L
N
S
N
L
L'
R
Master
R
N
L
Slave

## Set items

To receive the bundle according to the technical specification, please order the items listed.



**PD9-M-1C-FC**
Art.No: 92900

Voltage: 110 – 240 V AC 50 / 60 Hz
Dimensions: Sensor head: Ø 45 x 28 mm,
Power supply: 165 x 24 x 24 mm
Power consumption: approx. 0.5 W



**Cover IP65 for Sensor head PD9**
Art.No: 92958

Degree / class of protection: IP65
Housing: UV-resistant
Material color: transparent



**Cover ring PD9 Ø 36 mm**
Art.No: 92238

Dimensions: Ø 36 mm
Housing: polycarbonate, UV-resistant
Material color: white glossy