B.E.G. LUXOMAT® net



SA4 - 230 / 16 / H / EM / KNX REG

90139 EAN: 4007529901395

Switching actuator for switching loads

Transformer-based current measurement (± 10mA)

True effective value measurement (current)

Order data

Designation	Colour	Art.No
SA4 - 230 / 16 / H / EM / KNX REG	grey	90139

Technical data

Voltage:	via KNX BUS
Dimensions:	90 x 72 x 64 mm (4 TE)
Typ. power input:	5 mA typical 20 mA max.
Power consumption:	0.15 W
Degree / class of protection:	IP20 / Class II
Ambient temperature:	-5 °C to +45 °C
Material color:	grey
KNX TP 256:	Yes
Connections and wires:	0.2 ... 4.0 mm² rigid 0.25 ... 2.5 mm² fine-wired (with or without ferrule), USB
Channel 1 to channel 4 or 8	
Switching power:	3680 W, cos φ = 1 max. inrush current Ip (150 µs) = 600 A
Type of contact (k):	µ-contacts, dry NO contact, (if N is connected, channel 1 is no longer potential-free and is used to determine the phase position)
Outputs:	90139= 4 switching outputs 93339= 8 switching outputs
Current measurement	
Effective value measurement Measuring range: 10 mA ... 20 A AC (no DC) Accuracy at AC sine typ.: 3% of actual current ± 20 mA Frequency: 50/60 Hz	
Active power measurement	
Optionally without recognition of the phase state between current and voltage or with recognition of the phase state (input via ETS). Measuring range: 2 W ... 4600 W AC (no DC) Accuracy at AC sine typ.: 5 % of the current power value ± 5 W Frequency: 50/60 Hz	

Product information

Switching actuator for switching loads

DIN-rail mount device, width 72 mm (4TE, SA4 - 230 / 16 /) or 144 mm (8 TE, SA8 - 230 / 16 /) for mounting on a DIN-rail (TH35 EN 60715) for installation in a switch cabinet

Transformer-based current measurement (± 10mA)

True effective value measurement (current)

Voltage-synchronous active power measurement

The device has four (SA**4** - 230 / 16 /) or eight (SA**8** - 230 / 16 /) independant potential-free NO contacts

The switching contacts are optimised for capacitive loads

Manual switches for switching without bus tension

The switching actuator is powered by the KNX bus, no additional power supply required

Connection of the outputs is realised by means of screw terminals

The voltage is assumed to be sinusoidal. For the channels 2 ... 4, the phase shift can be adjusted via ETS when using different phase conductors (three-phase alternating current).

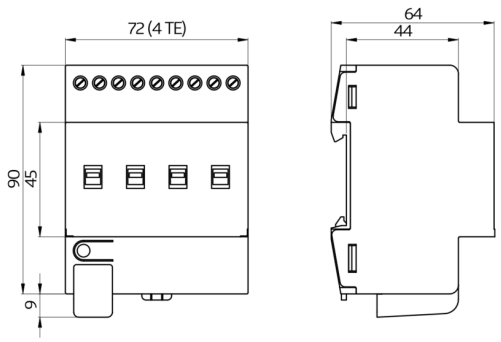
72 (4 TE)
64
44
90
45
9