B.E.G. LUXOMAT® net



SA4 - 230 / 16 / H / KNX REG

90136 EAN: 4007529901364

Switching actuator for switching loads

The switching contacts are optimised for capacitive loads

Manual switches for switching without bus tension

Order data

Designation	Colour	Art.No
SA4 - 230 / 16 / H / KNX REG	grey	90136

Technical data

Voltage:	via KNX BUS
Dimensions:	90 x 72 x 64 mm (4 TE)
Typ. power input:	5 mA typical 20 mA max.
Power consumption:	0.15 W
Degree / class of protection:	IP20 / Class II
Ambient temperature:	-5 °C to +45 °C
Material color:	grey
KNX TP 256:	Yes
Connections and wires:	0.2 ... 4.0 mm² rigid 0.25 ... 2.5 mm² fine-wired (with or without ferrule)
per channel	
Switching power:	3680 W, cos φ = 1 max. inrush current Ip (150 µs) = 600 A
Type of contact (k):	µ-contacts, dry NO contact
Outputs:	90136= 4 switching outputs

Product information

Switching actuator for switching loads

DIN-rail mount device, width 72 mm (4TE, SA4 - 230 / 16 /) or 144 mm (8 TE, SA8 - 230 / 16 /) for mounting on a DIN-rail (TH35 EN 60715) for installation in a switch cabinet

The device has four (SA**4** - 230 / 16 /) or eight (SA**8** - 230 / 16 /) independant potential-free NO contacts

The switching contacts are optimised for capacitive loads

Manual switches for switching without bus tension

The switching actuator is powered by the KNX bus, no additional power supply required

Connection of the outputs is realised by means of screw terminals

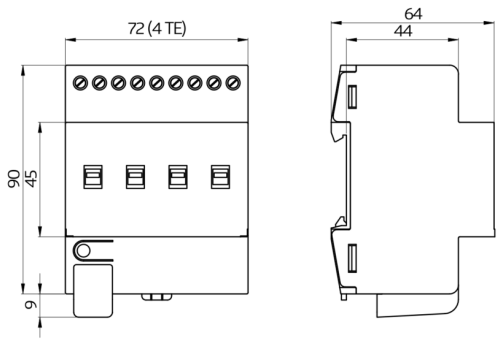
72 (4 TE)
64
44
90
45
9