B.E.G. LUXOMAT®

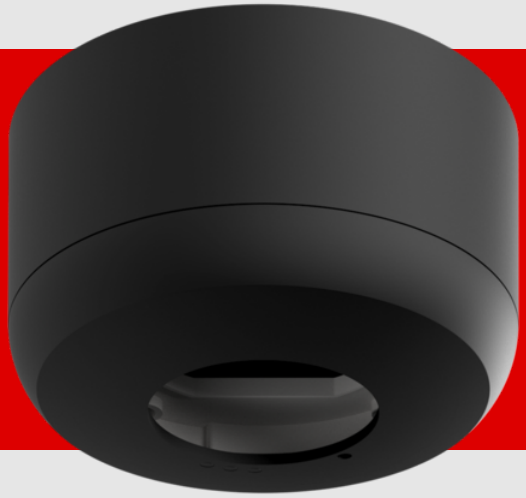

SM socle mounting set IP54 PD2N H

93783 EAN: 4007529937837

Surface-mounting set for converting PD2N ceiling-mounted devices

For usability/compatibility of the accessories please refer to the descriptions of the main articles

Order data

Designation	Colour	Art.No
SM socle mounting set IP54 PD2N H	black	93783

Technical data

Dimensions:	Ø 110 x 65 mm
Degree / class of protection:	IP54
Material color:	black, similar to RAL9005

Product information

Surface-mounting set for converting PD2N ceiling-mounted devices

For usability/compatibility of the accessories please refer to the descriptions of the main articles

Suitable for: 93240, 93351, 93452, 93453, 93455, 93476, 93477, 93580, ...

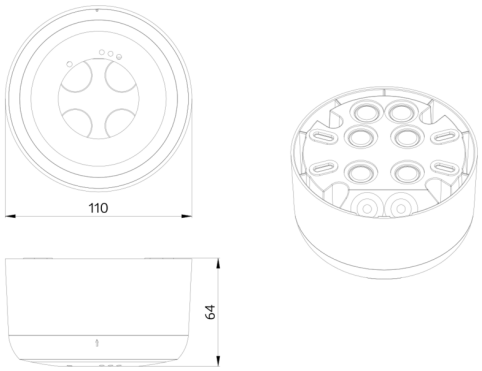
110
64