B.E.G. LUXOMAT®

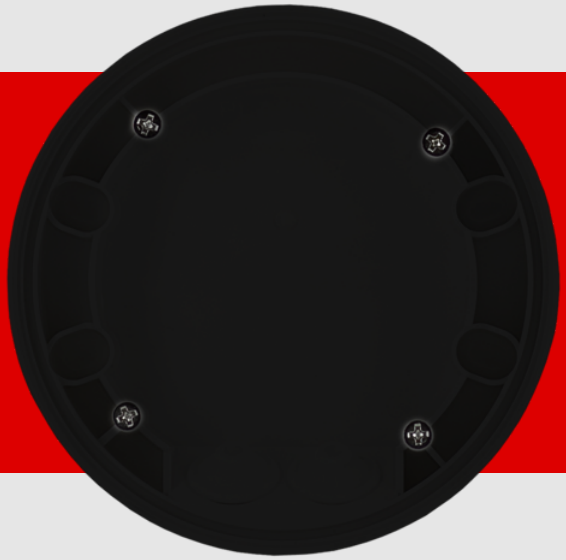

# SM socle mounting set IP54 PD2N- / PD4N-FM

93753 EAN: 4007529937530

Surface mounting set IP54 for PD2N and PD4N flush-mount devices

For usability/compatibility of the accessories please refer to the descriptions of the main articles

## Order data

| Designation | Colour | Art.No |
|---|---|---|
| SM socle mounting set IP54 PD2N- / PD4N-FM | black | 93753 |

## Technical data

| | |
|---|---|
| Dimensions: | Ø 109 x 19 mm |
| Degree / class of protection: | IP54 |
| Housing: | polycarbonate, UV-resistant |
| Material color: | black mat, similar to RAL9005 |

## Product information

Surface mounting set IP54 for PD2N and PD4N flush-mount devices

For usability/compatibility of the accessories please refer to the descriptions of the main articles

Suitable for: 93340, 93368, 93377, 93511, 93513, 93515, 93517, 93531, 93534, 93544, 93546, ...

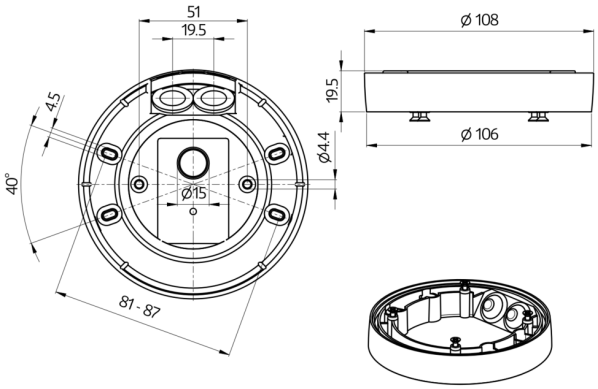
51
19.5
4.5
40°
Ø15
81 - 87
Ø 108
19.5
Ø4.4
Ø 106