

Wall holder PD2N/4N Typ A

93164 EAN: 4007529931644

Fixture for wall mounting of compatible B.E.G. ceiling occupancy detectors

Including screws for mounting a compatible B.E.G. ceiling occupancy detector

For usability/compatibility of the accessories please refer to the descriptions of the main articles

Order data

Designation	Colour	Art.No
Wall holder PD2N/4N Typ A	white	93164

Accessories

Designation	Colour	Art.No
SM socket for Wall holder	white	93192

Technical data

Dimensions:	133 x 106 x 66 mm
Degree / class of protection:	IP54 /
Housing:	polycarbonate, UV-resistant
Material color:	white, similar to RAL9010

Product information

Fixture for wall mounting of compatible B.E.G. ceiling occupancy detectors

Including screws for mounting a compatible B.E.G. ceiling occupancy detector

For usability/compatibility of the accessories please refer to the descriptions of the main articles

Suitable for wall mounting with rear cable feed

Side cable feed possible with additional accessories

Mounting on common flush-mounted boxes possible with additional accessories

available in various colours

Suitable for: 93240, 93241, 93340, 93351, 93353, 93377, 93452, 93453, 93455, 93460, 93461, 93463, 93473, 93474, 93476, 93477, 93510, 93511, 93513, 93514, 93515, 93516, 93517, 93533, 93534, 93580, ...

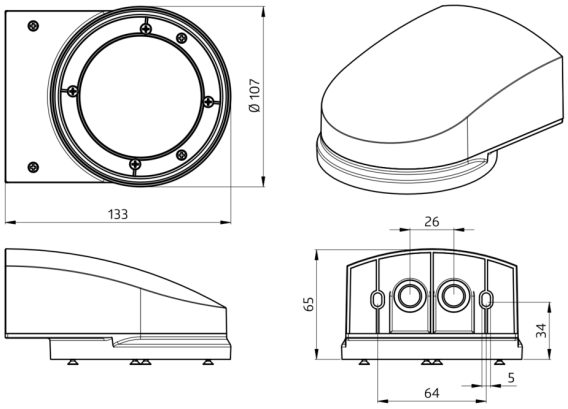
Ø 107
133
26
65
34
5
64

Accessories



SM socket for Wall holder
Art.No: 93192

Dimensions: 103 x 80 x 26 mm
Housing: polycarbonate, UV-resistant
Material color: white