B.E.G. LUXOMAT®

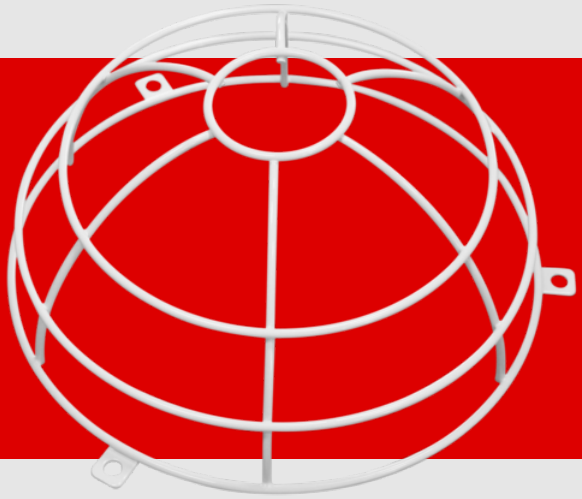

Wire basket BSK (Ø 200 x 90 mm)

92199 EAN: 4007529921997

- Dimensions: Ø 200 x 90 mm
- Impact strength: IK09
- Housing: coated steel basket

Order data

Designation	Colour	Art.No
Wire basket BSK (Ø 200 x 90 mm)	white	92199

Technical data

Dimensions:	Ø 200 x 90 mm
Impact strength:	IK09
Housing:	coated steel basket
Material color:	white

Product information

This wire basket protects the motion and occupancy detectors PD2, PD3 and PD4 from being damaged by balls or vandalism.

Suitable for: 92113, 92119, 92140, 92142, 92143, 92144, 92148, 92149, 92150, 92151, 92152, 92153, 92154, 92155, 92156, 92158, 92163, 92164, 92165, 92166, 92184, 92186, 92188, 92190, 92194, 92196, 92197, 92198, 92218, 92219, 92245, 92248, 92254, 92255, 92265, 92270, 92272, 92274, 92279, 92280, 92305, 92306, 92440, 92442, 92443, 92444, 92445, 92480, 92485, 92550, 92555, 92565, 92575, 92576, 92580, 92585, 92586, 92587, 92589, 92591, 92709, 92721, 92730, 92735, 92743, 92746, 92747, 92751, 92756, 92759, 92760, 92761, 93091, 93092, 93093, 93231, 93233, 93235, 93240, 93241, 93247, 93284, 93288, 93317, 93327, 93340, 93345, 93351, 93353, 93368, 93369, 93377, 93404, 93405, 93452, 93453, 93455, 93460, 93461, 93463, 93469, 93473, 93474, 93476, 93477, 93478, 93479, 93484, 93485, 93488, 93510, 93511, 93512, 93513, 93514, 93515, 93516, 93517, 93518, 93530, 93531, 93533, 93534, 93535, 93536, 93543, 93544, 93545, 93546, 93563, 93580, 93845, 94402, ...

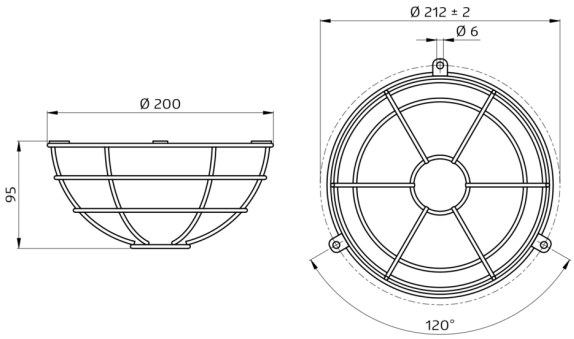
Ø 212 ± 2
Ø 6
Ø 200
95
120°